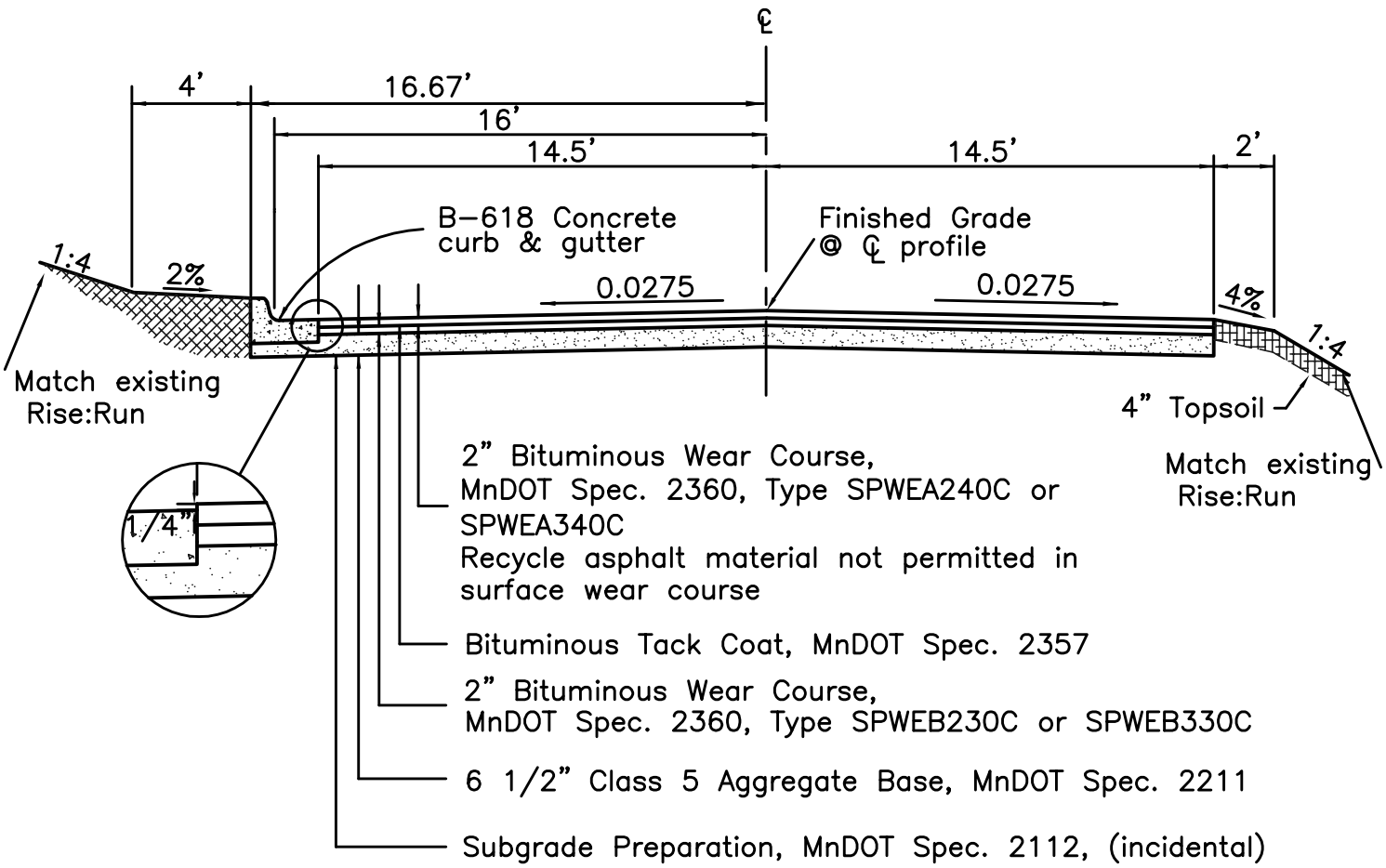

TYPICAL URBAN/RURAL SECTION

TYPICAL STREET SECTION

COMMERCIAL 9-TON HL-366B5

NOT TO SCALE